INDAG
Maschinenbau GmbH

The FlowMix®-Company



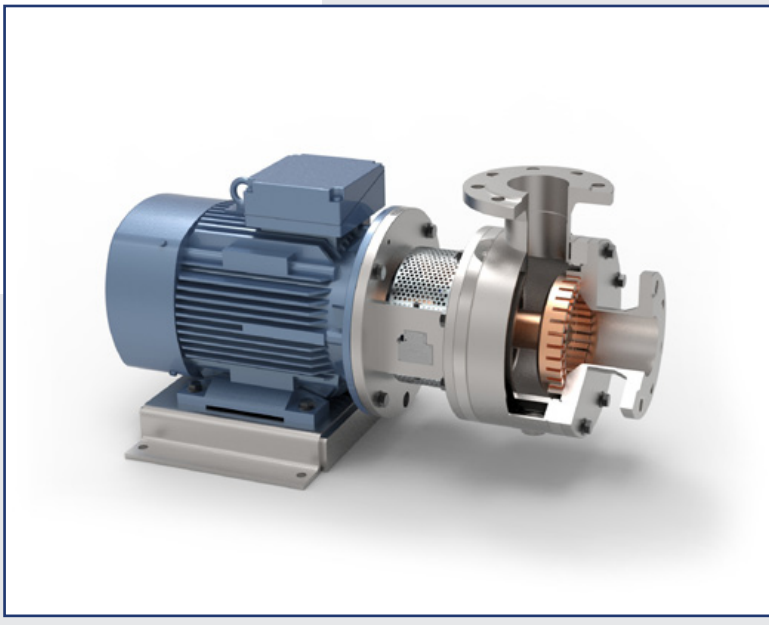

Inline Homogenizer Type DLM/H

High shear mixing
for emulsifying and dispersing

Gentle Inline Mixer Type DLM/M

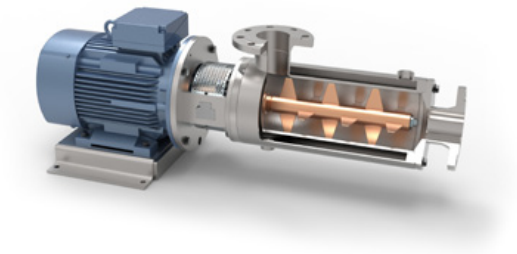

Dynamic Inline Mixer Type DLM/P

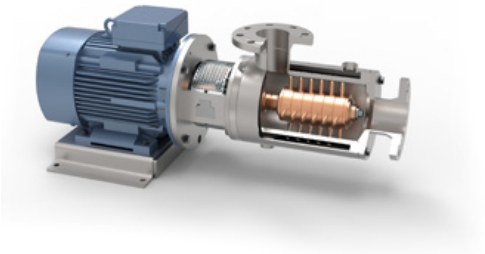

Intensive Inline Mixer Type DLM/S

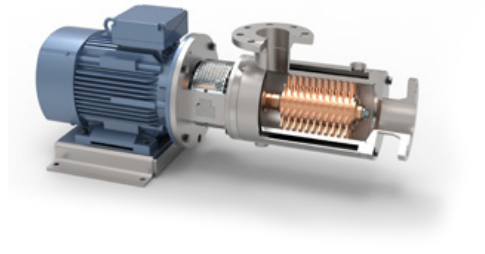

Inline Homogenizer Type DLM/H

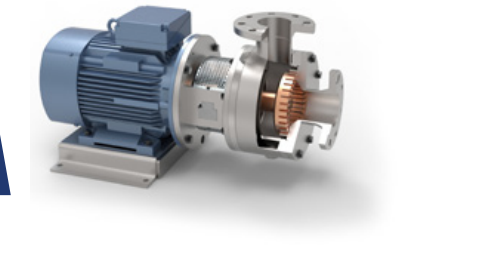

Shear rate

-

+

Function and application of DLM/H

The INDAG Inline Homogenizer type DLM/H is used for effective dispersing (emulsifying) and for producing a suspension from liquids and solids. Furthermore, solids can be crushed in liquids. Examples for the use of the DLM/H are: the production of stable emulsions from oil + water + emulsifier; the dilution of sodium lauryl ether sulfate (SLES) with water; the production of paints, lacquers, detergents, adhesives. With an INDAG DLM/H, compared to batch systems, the process time is shortened and the product quality is improved.

Technology of DLM/H

INDAG homogenizer type DLM/H consists of a rotor and stator equipped with axial positioned mixing/shearing elements. The stator can be designed to be cooled or heated. The DLM/H is offered in compact design (KB) and in bearing block design (LB). In the compact design, the rotor is mounted by the output shaft of the motor. In the bearing block design, the rotor is mounted by its own bearing block. With own bearing block, narrower shear gaps and thus a more intensive shear effect can be realized. Furthermore, this design is also suitable for mixing under high pressure or high temperature. The type of rotor seal is selected to suit each application. For the supply of the double acting mechanical seal INDAG offers the suitable barrier fluid system. INDAG mixers are designed likewise for explosive areas and substances (ATEX).

Positioning
Horizontal or vertical is possible

Pressure levels
6 bar, 10 bar, 16 bar, 25 bar, 40 bar, 100 bar

Materials
1.4301 (AISI 304), 1.4404 (AISI 316L), 1.4462 (AISI 318)

Seals
Single acting mechanical seal; double acting mechanical seal; stuffing box seal; magnetic coupling; visco seal

Connections
EN, DIN, ANSI flange and various others on request

Rotational speed
1,500 rpm to 6,000 rpm

Capacities
50 l/h to 120,000 l/h

Temperatures
0 °C to 300 °C

Viscosities
1 mPas to 500,000 mPas

Advantages of DLM/H

- Very good self-cleaning during CIP-cleaning
- Efficient introduction of mixing energy
- Optimal completely heatable
- Hygienic construction
- Applicable at high pressures and high temperatures
- Variable mixing energy by speed change via frequency converter

Flow diagram of DLM/H

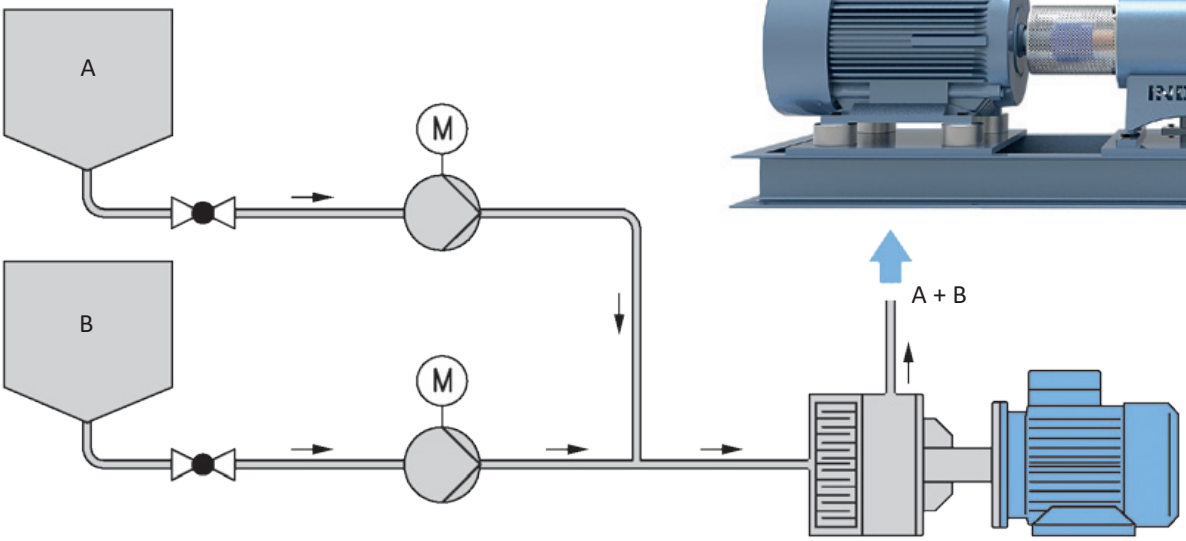

INDAG
Inline Homogenizer
DLM/H

INDAG Inline Homogenizer
type DLM/H

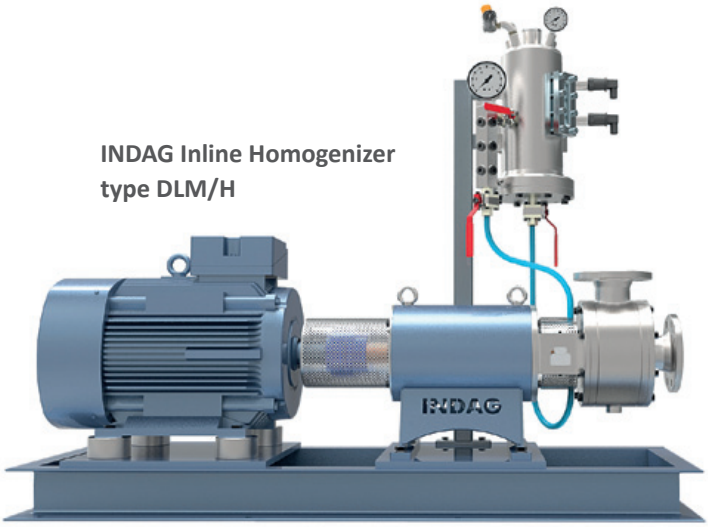

Mixer sizes and capacities of DLM/H

Type DLM/H	unit	2	3	4	5
capacity*	l/h	50-6,000	500-30,000	2,000-55,000	5,000-120,000
connection	DN	25-50	50-65	80-100	100-125
optional	ASME	1-2”	2”-2,5”	3”-4”	4”-5”
power	kW	2.2-4.0	4-11	11-22	37.5-75
rotational speed	1/min	1,000-6,000	1,000-5,000	1,000-3,600	1,000-3,600
mixing stages compact version	2	DLM/H-202 KB	DLM/H-302 KB	DLM/H-402 KB	DLM/H-502 KB
mixing stages bearing block version	3		DLM/H-303 LB	DLM/H-403 LB	DLM/H-503 LB

*Capacity depends on product.



INDAG Inline Homogenizer type DLM/H-403 with bearing block

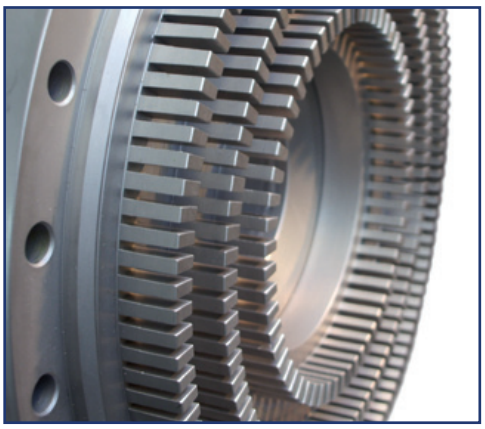

Stator mixing elements three-stages

Dimension drawing DLM/H (LB)

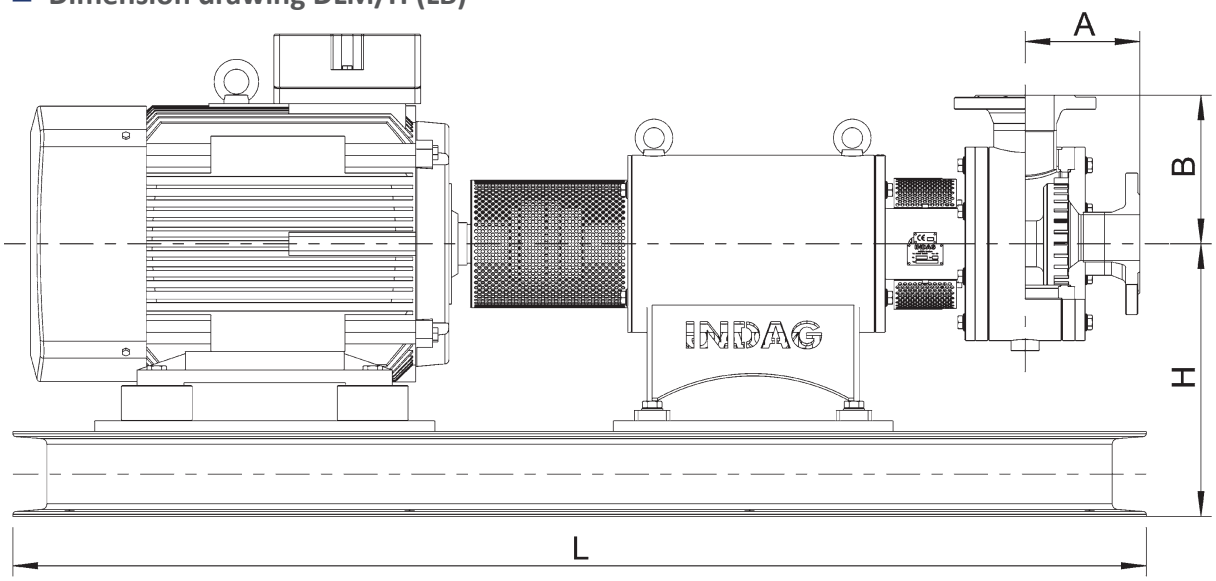

Dimension drawing DLM/H (KB)

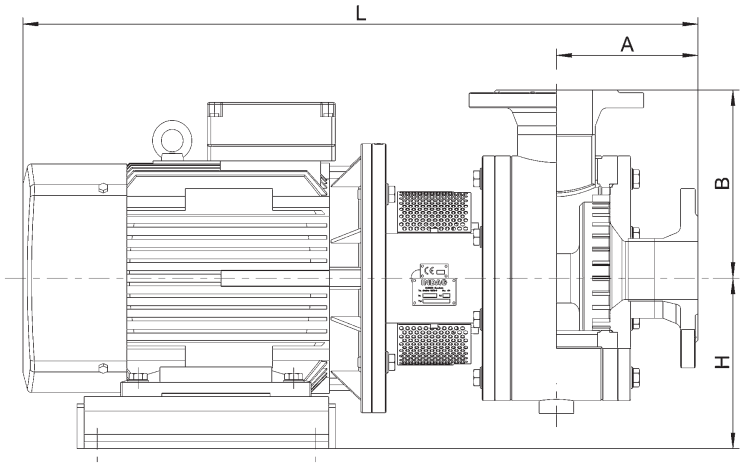

Dimension table of DLM/H

Type	unit	A	B	H*	L*
DLM/H-202 KB	mm	130	165	170	595
DLM/H-302 KB	mm	162	180	190	775
DLM/H-402 KB	mm	174	210	190	835
DLM/H-502 KB	mm	202	260	238	1010
DLM/H-302 LB	mm	162	180	312	1500
DLM/H-402 LB	mm	174	210	385	1600
DLM/H-502 LB	mm	202	260	460	1800

* depends on the drive

Company profile

For more than 65 years, INDAG has been developing, designing and manufacturing dynamic inline mixers in Borsfleth near Hamburg.
INDAG mixers are designed to meet the highest quality and efficiency standards.

Product range and services

Our product range covers: Dynamic inline mixers for gentle, intensive, or high shear mixing. Possible applications are: Mixing, emulgating, dispersing and foaming.
Our services include: Commissioning, maintenance, and repair of INDAG mixers, spare parts service and customer support based on many years of experience.

INDAG
Maschinenbau GmbH

Ivenfleth 13
25376 Borsfleth / GERMANY
Phone: +49 4124 9876-0
Fax: +49 4124 9876-54
E-Mail: info@indag.de
www.indag.com

NORTH AMERICAN PROCESS, INC.
d/b/a INFINI-MIX Process Solutions
811 East Maple Avenue
Mora, MN 55051
(855) PROCESS (776-2377)
Sales@naprocess.com
www.WeMixStuff.com