Case No. 112A

Mixing processes for the production of mashed potatoes, croquettes or potato pancakes



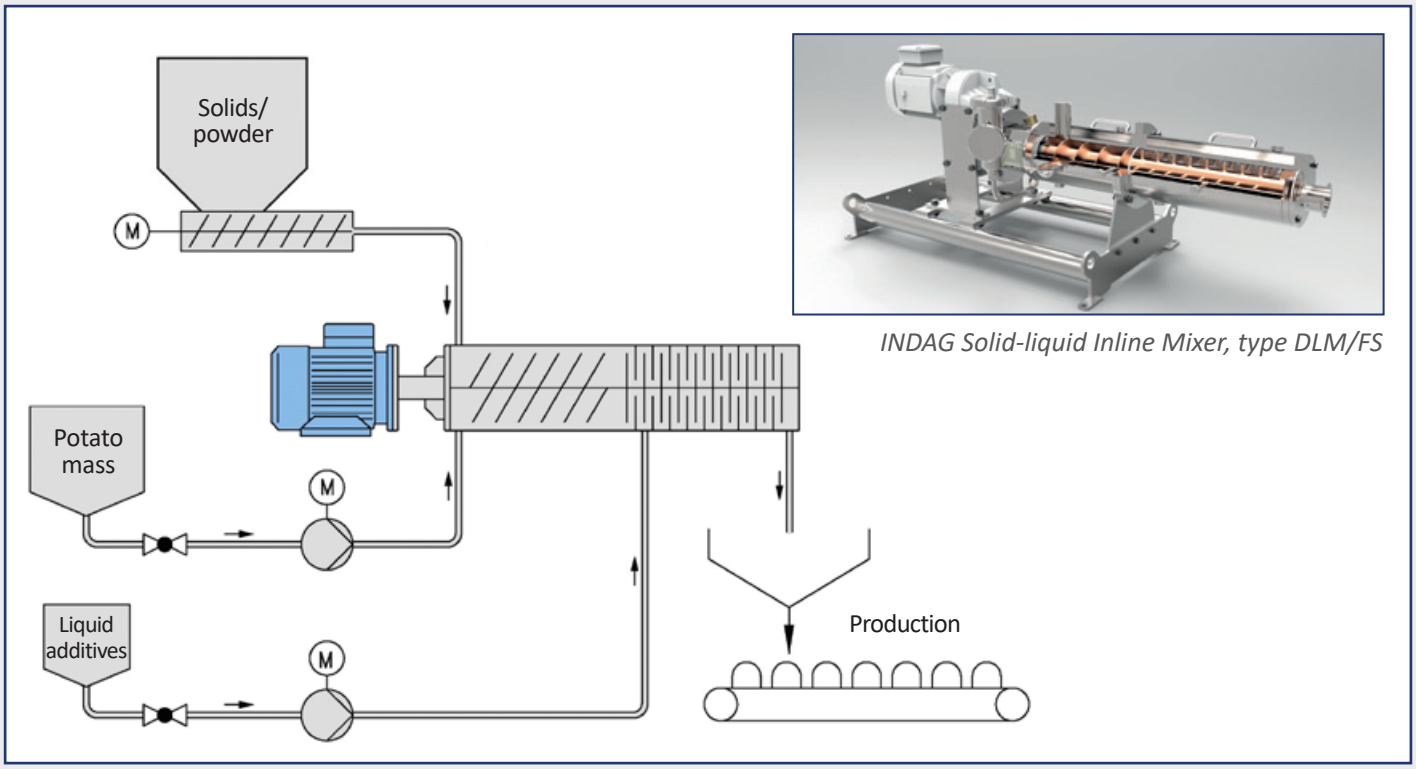

INDAG Solid-liquid Inline Mixer, type DLM/FS

Flow chart example for an 'end-of-pipe' solution

Process description

The aim is to mix the respective potato mass (mash, grated, etc.) homogeneously with dry substances such as starch or salts without negatively influencing the compression of the mass.

The warm potato mass (approx. 90 - 95 °C) is fed into the side of the mixer from the grinder or with an external pump. The dry ingredients are dosed gravimetrically, according to the percentage recipe proportions, from above into the radial dry material inlet of the Solid-Liquid Inline Mixer.

Under normal circumstances, rising vapours and steam lead to the accumulation of solids in the inlet area. This clogging is counteracted by the atmospheric discharge of the vapours by means of a coated vapour dome.

Structure-improving ingredients such as oils or cream can also be added via a separate liquid inlet.

→

Advantages

- **Significant improvement in mixture homogeneity compared to batch mixers**
- **Basis for stable subsequent process steps**
- **High standard of hygiene due to CIP capability**
- **Preservation of rasp structures during mixing**
- **Improved dimensional stability before the fryer**
- **Low roughening after frying**
- **Good texture and consistency after frying**
- **Good fat absorption after deep fryer**
- **Temperature stability due to double-walled housing**
- **High throughput rates up to 20 t/h possible**

Case No. 112A

Mixing processes for the production of mashed potatoes, croquettes or potato pancakes



All the recipe ingredients dosed in produce a premix in the first part of the mixer, the conveying zone. The premixed paste is pressed through the entire second part of the mixer, the mixing zone, by a concave screw. The mixing zone consists of pin-shaped mixing elements with rounded contours, each on the rotor and stator. The rounded and smoothed surfaces prevent negative influences from shearing on the product structures.

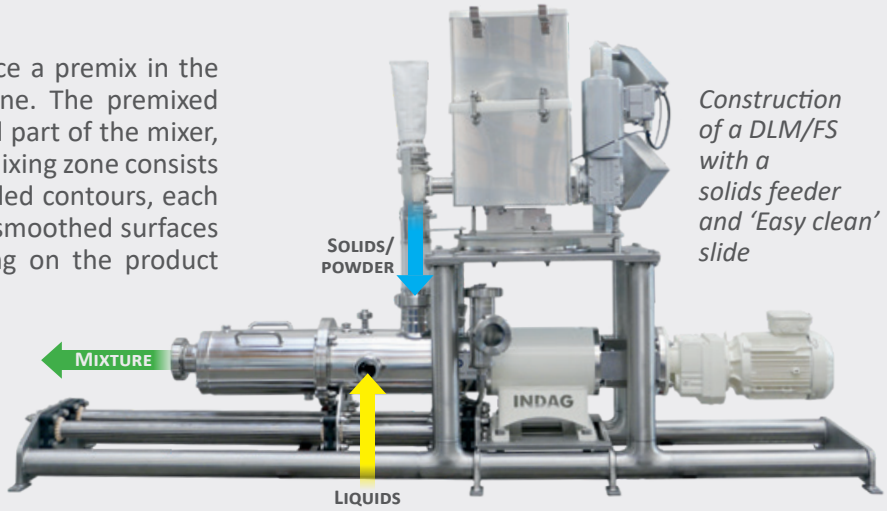

Construction of a DLM/FS with a solids feeder and 'Easy clean' slide

The finished mixture leaves the mixing zone as a homogeneous mass with a uniform structure and roughness. It is ideally prepared for the next process step, the moulding machine, for example croquettes. The subsequently deep-fried croquettes have an appealing texture.

The mixer has a double jacket. It can be heated up before the system starts and the product can be kept at a constant temperature during operation.

Thanks to the electropolished material surfaces, the mixer fulfils the highest hygiene standards with a long service life and minimal use of wearing parts.

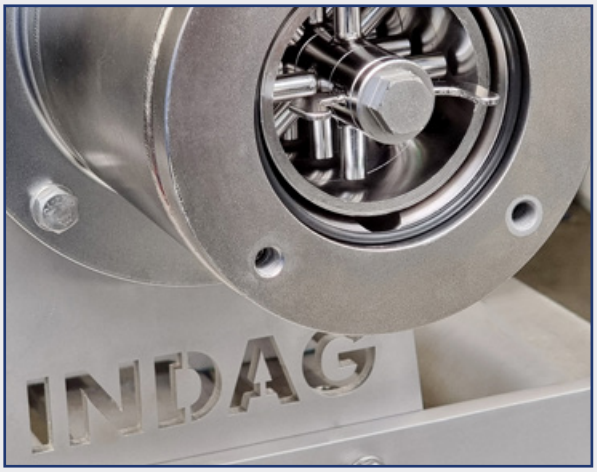

Solid-Liquid Inline Mixer with pin mixing elements

Comparable applications with a similar process and the same mixer

- Meat sausage with herbs and/or pieces of meat
- Potato pieces with mayonnaise and herbs
- Egg salad
- Saithe salad

NORTH AMERICAN PROCESS, INC.
d/b/a INFINI-MIX Process Solutions
811 East Maple Avenue
Mora, MN 55051
(855) PROCESS (776-2377)
Sales@naprocess.com
www.WeMixStuff.com

INDAG
Maschinenbau GmbH
The FlowMix®-Company